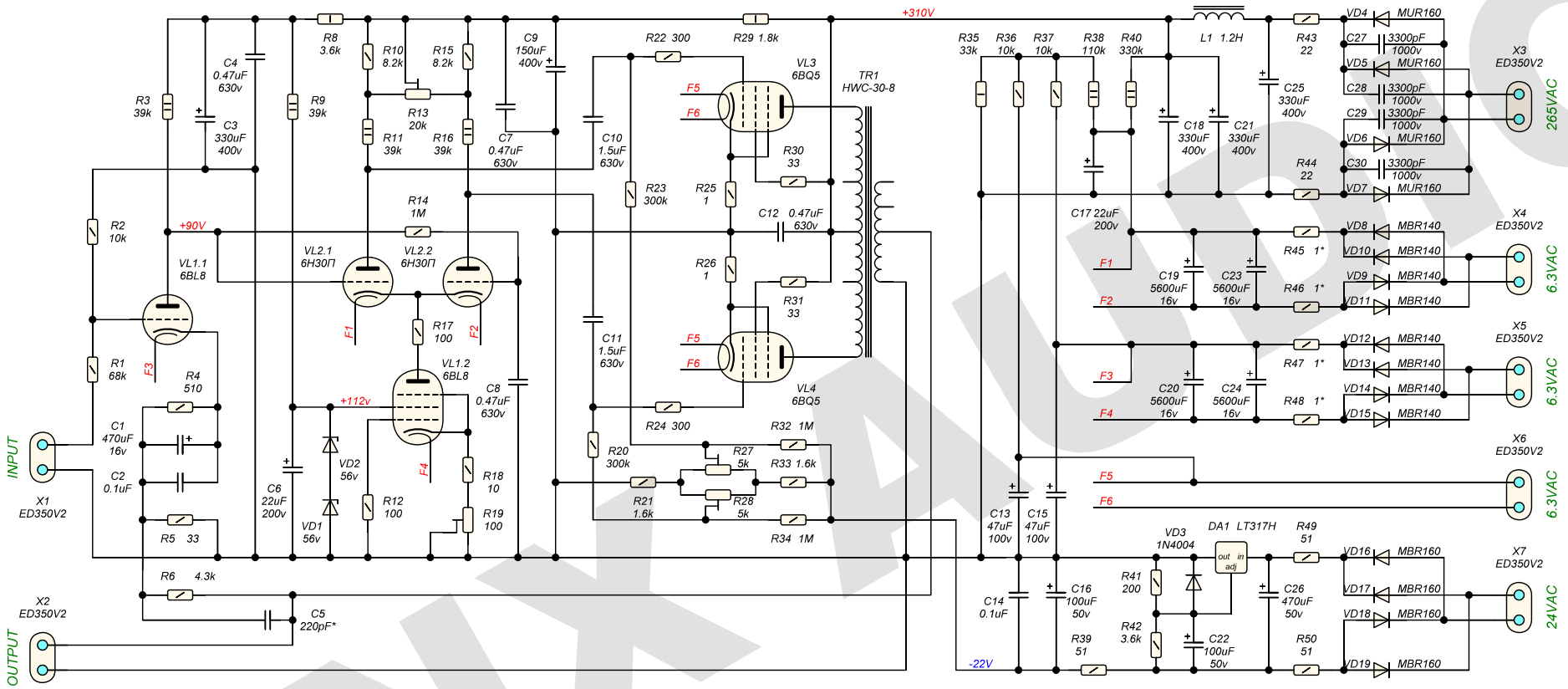

LYNX AUDIO

LYNX AUDIO

LYNX VTA25 15W UNIVERSAL TUBE AMPLIFIER